LINEPULS

Guided incremental magnetic sensor

www.lika.biz

series **SMIG**

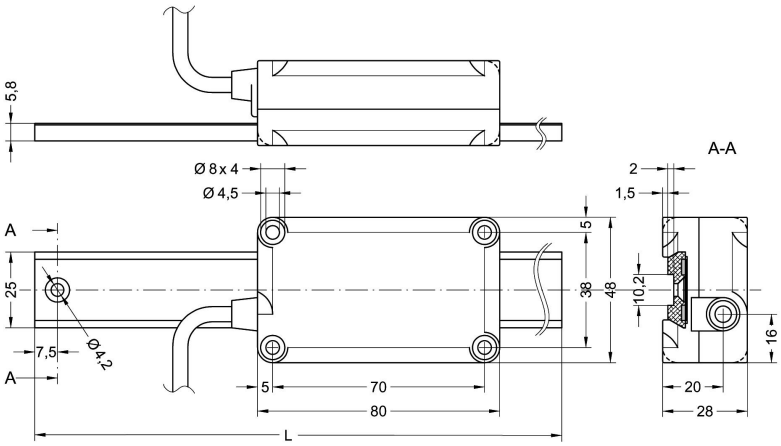

SMIG

ENVIRONMENTAL SPECIFICATIONS	
Operating temperature range:	-25°C ÷ +85°C (-13°F +185°F)
Storage temperature range:	-40°C ÷ +100°C (-40°F +212°F)
Protection:	IP67

MECHANICAL SPECIFICATIONS	
Dimensions:	see drawing
Housing:	Nylon 6FC 30%
Connections:	cable 2.0 m, inline M12 connector
Travel speed:	typ. 0,5 m/s - max. 1m/s
Resolution:	0,05 / 0,025 / 0,01 / 0,005 mm
System accuracy (SMIG + MTIG):	± 50 µm max.
Repeatability:	± 1 increment
Measurement length:	Measurement length = profile length - 80 mm

ELECTRICAL SPECIFICATIONS	
Power supply:	+5Vdc ±5%, +10V ÷ +30V
Output circuit:	Push-Pull, Line Driver (RS422)
Output current:	40 mA max.
Power consumption:	70 mA max.
Output signals:	ABI, /ABI
Index signal:	every 5mm
Protection:	against inversion of polarity

- Incremental ruler
- Easy installation
- Resolution up to 5 µm
- Unaffected by dust, debris or liquids

ORDERING CODE

XXXX - X - X - XX - X - XX

SERIES

SMIG	

OUTPUT CIRCUIT

Push-Pull (ABI, /ABI)	YC
Line Driver (ABI, /ABI)	L

POWER SUPPLY

+5Vdc ±5% (L)	1
+10Vdc ÷ +30Vdc (Y and L)	2

RESOLUTION

50	0,05 mm
25	0,025 mm
10	0,01 mm
5	0,005 mm

I	Index

CONNECTIONS

Lx	Cable lenght on request (e.g. L2)
Mx	Cable x m with M12 connector (e.g. M0,5)

XXXX - X - XX - X

SERIES

MTIG	

PROFILE LENGTH

240 mm (ML = 160mm)	240
300 mm (ML = 220mm)	300
370 mm (ML = 290mm)	370
650 mm (ML = 570mm)	650

ACCURACY CLASS

50	± 50µm (SMIG+MTIG)

COVER STRIP

1	supplied